

Date: _____ Project: _____

Type: _____ Part #: _____

HaloTube™ Series

Versatile Architectural Sign Light

Transform architectural signage and displays with the HaloTube™ Versatile Architectural Sign Light. Designed to cast a rich, uniform glow, its rotatable body tilts up to 300° to wash surfaces in brilliant, accentuating light. Weatherproof and elegant, it brings stunning visual impact and effortless sophistication to any facade.



Product Features

- Heavy-duty extruded aluminum housing with standard white finish and custom color options for seamless design integration.
- 5-stage phosphate bonding and high-reflectance baked enamel maximize durability and light distribution.
- Rotatable end caps allow 300° upward and downward tilt for precise optical aiming and targeted accent lighting.
- Fully sealed, IP66 wet-location rated housing built to handle heavy indoor washdowns and severe weather outdoors.
- Modular Interlinking Mix and match 2FT, 3FT, 4FT, and 6FT fixtures in continuous runs using inline link kits to fit any sign width or layout
- Rated Lifespan (L70): 100,000+ Hours LED life expectancy
- Operating temperature: -25 ~ 40°C (-13°F to +104°F)
- 5 Year warranty

Specifications

Voltage	120-347V
Lengths	2FT, 3FT, 4FT, 6FT
Wattage	2FT: 16W 3FT: 20W 4FT: 30W 6FT: 40W
Selectable CCT	27/30/35/40/50K (Default 4000K)
Power Factor	>0.9
THD	<20%
CRI	90
Lumen	Up to 3,760 lm
Efficacy	Up to 94 lm/W
Beam Angle	>120
Dimming	0-10V
Mounting	Wall mount
Applications	Showrooms, galleries, retail signage, transit stations, wall illumination

All Rights Reserved © Renolighting (905) 604-4666 | sales@renolighting.com | www.renolighting.com
Reno Lighting reserves the right to change this product and related instructions without notice.
Refer to the product page for the latest information.

Specifications

2 FT – Versatile Architectural Sign Light

Order #	Model	Finish	Wattage	Voltage	Lumens	Efficacy	CCT
R51070	RENO-HTSL-2FT-DV-MCCT-WH	White	16W	120-347V	1,265.3 lm	79.0 lm/W	2700K
					1,277.0 lm	79.8 lm/W	3000K
					1,321.4 lm	82.5 lm/W	3500K
					1,336.8 lm	83.5 lm/W	4000K
					1,368.9 lm	85.5 lm/W	5000K
R51071	RENO-HTSL-2FT-DV-MCCT-BK	Black	16W	120-347V	1,100.9 lm	68.8 lm/W	2700K
					1,102.5 lm	68.9 lm/W	3000K
					1,106.9 lm	69.1 lm/W	3500K
					1,136.4 lm	71.0 lm/W	4000K
					1,156.8 lm	72.3 lm/W	5000K

3 FT – Versatile Architectural Sign Light

Order #	Model	Finish	Wattage	Voltage	Lumens	Efficacy	CCT
R51072	RENO-HTSL-3FT-DV-MCCT-WH	White	20W	120-347V	1,742.3 lm	87.1 lm/W	2700K
					1,771.5 lm	88.5 lm/W	3000K
					1,780.1 lm	89.0 lm/W	3500K
					1,809.9 lm	90.4 lm/W	4000K
					1,811.0 lm	90.5 lm/W	5000K
R51073	RENO-HTSL-3FT-DV-MCCT-BK	Black	20W	120-347V	1,468.7 lm	73.4 lm/W	2700K
					1,483.2 lm	74.1 lm/W	3000K
					1,493.7 lm	74.6 lm/W	3500K
					1,514.8 lm	75.7 lm/W	4000K
					1,535.6 lm	76.7 lm/W	5000K

4 FT – Versatile Architectural Sign Light

Order #	Model	Finish	Wattage	Voltage	Lumens	Efficacy	CCT
R51074	RENO-HTSL-4FT-DV-MCCT-WH	White	30W	120-347V	2,487.7 lm	82.9 lm/W	2700K
					2,529.8 lm	84.3 lm/W	3000K
					2,520.8 lm	84.0 lm/W	3500K
					2,555.1 lm	85.1 lm/W	4000K
					2,589.8 lm	86.3 lm/W	5000K
R51075	RENO-HTSL-4FT-DV-MCCT-BK	Black	30W	120-347V	2,126.3 lm	70.8 lm/W	2700K
					2,143.8 lm	71.4 lm/W	3000K
					2,150.0 lm	71.6 lm/W	3500K
					2,184.6 lm	72.8 lm/W	4000K
					2,221.1 lm	74.0 lm/W	5000K

All Rights Reserved © Renolighting (905) 604-4666 | sales@renolighting.com | www.renolighting.com
Reno Lighting reserves the right to change this product and related instructions without notice.
Refer to the product page for the latest information.

6 FT – Versatile Architectural Sign Light

Order #	Model	Finish	Wattage	Voltage	Lumens	Efficacy	CCT
R51076	RENO-HTSL-6FT-DV-MCCT-WH	White	40W	120-347V	3,603.1 lm	90.0 lm/W	2700K
					3,617.2 lm	90.4 lm/W	3000K
					3,646.7 lm	91.1 lm/W	3500K
					3,701.8 lm	92.5 lm/W	4000K
					3,760.7 lm	94.0 lm/W	5000K
R51077	RENO-HTSL-6FT-DV-MCCT-BK	Black	41W	120-347V	2,991.7 lm	72.9 lm/W	2700K
					3,011.2 lm	73.4 lm/W	3000K
					3,028.7 lm	73.8 lm/W	3500K
					3,069.4 lm	74.8 lm/W	4000K
					3,113.7 lm	75.9 lm/W	5000K

All Rights Reserved © Renolighting (905) 604-4666 | sales@renolighting.com | www.renolighting.com
Reno Lighting reserves the right to change this product and related instructions without notice.
Refer to the product page for the latest information.

Accessories

Connectors

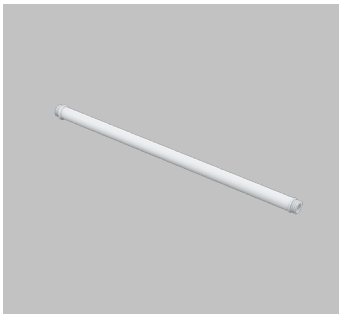

Extension Rod Kit | White Finish
R59230
RENO-HTSL-ERK-WH



Extension Rod Kit | Black Finish
R59231
RENO-HTSL-ERK-BK

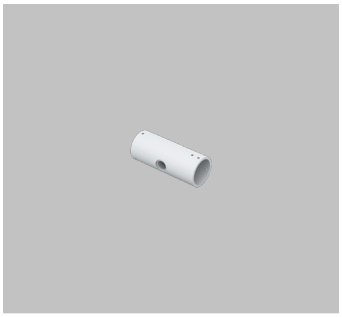

Inline Link Kit | White Finish
R59232
RENO-HTSL-LINK-WH



Inline Link Kit | Black Finish
R59233
RENO-HTSL-LINK-BK

Order #	Model	Description
R59230	RENO-HTSL-ERK-WH	12-inch Extension Rod Kit, White Finish
R59231	RENO-HTSL-ERK-BK	12-inch Extension Rod Kit, Black Finish
R59232	RENO-HTSL-LINK-WH	Inline Link Kit, White Finish
R59233	RENO-HTSL-LINK-BK	Inline Link Kit, Black Finish

Linking Diagram

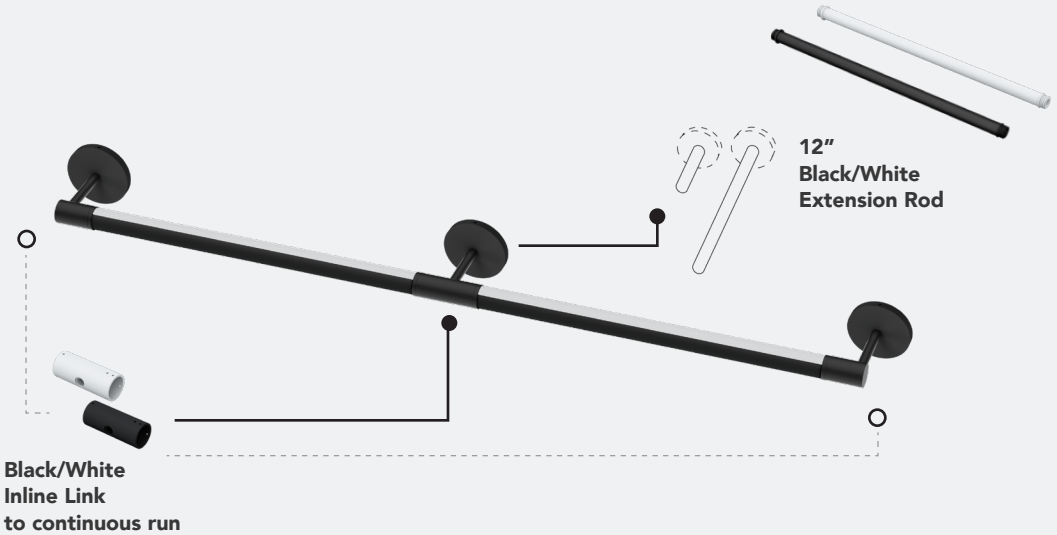

All Rights Reserved © Renolighting (905) 604-4666 | sales@renolighting.com | www.renolighting.com
Reno Lighting reserves the right to change this product and related instructions without notice.
Refer to the product page for the latest information.

Dimensions

Versatile Architectural Sign Light

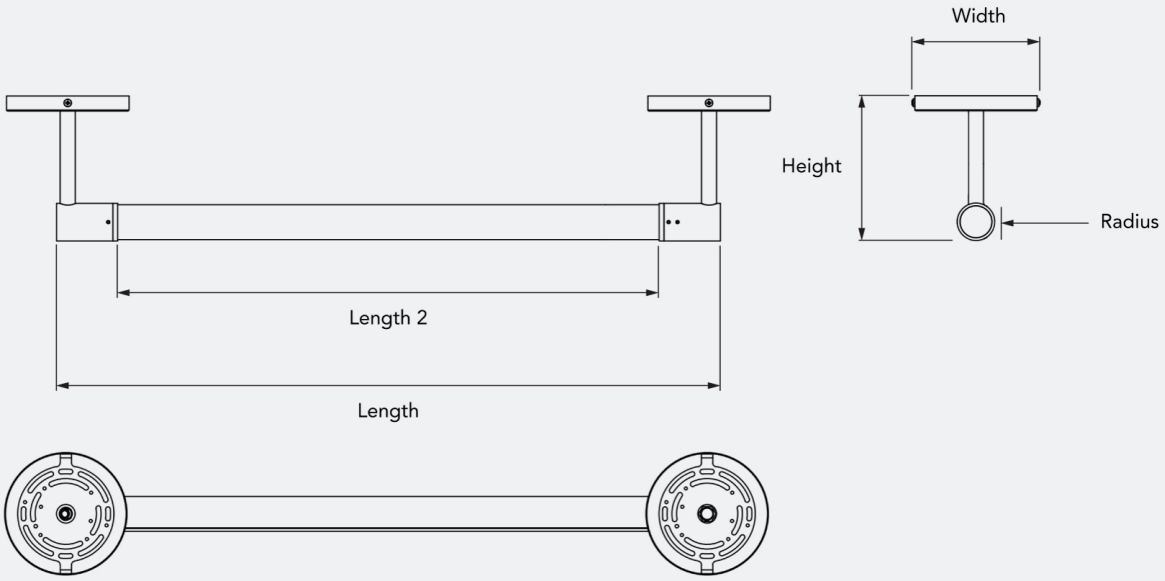

Order #	Size	Finish	Length	Length 2	Width	Height	Radius
R51070	2FT	White	27.76" (705.0 mm)	22.83" (580.0 mm)	5.12" (130.0 mm)	6.06" (154.0 mm)	1.57" (40.0 mm)
R51071	2FT	Black	27.76" (705.0 mm)	22.83" (580.0 mm)	5.12" (130.0 mm)	6.06" (154.0 mm)	1.57" (40.0 mm)
R51072	3FT	White	39.37" (1,000.0 mm)	34.45" (875.0 mm)	5.12" (130.0 mm)	6.06" (154.0 mm)	1.57" (40.0 mm)
R51073	3FT	Black	39.37" (1,000.0 mm)	34.45" (875.0 mm)	5.12" (130.0 mm)	6.06" (154.0 mm)	1.57" (40.0 mm)
R51074	4FT	White	51.18" (1,300.0 mm)	46.26" (1,175.0 mm)	5.12" (130.0 mm)	6.06" (154.0 mm)	1.57" (40.0 mm)
R51075	4FT	Black	51.18" (1,300.0 mm)	46.26" (1,175.0 mm)	5.12" (130.0 mm)	6.06" (154.0 mm)	1.57" (40.0 mm)
R51076	6FT	White	73.82" (1,875.0 mm)	68.90" (1,750.0 mm)	5.12" (130.0 mm)	6.06" (154.0 mm)	1.57" (40.0 mm)
R51077	6FT	Black	73.82" (1,875.0 mm)	68.90" (1,750.0 mm)	5.12" (130.0 mm)	6.06" (154.0 mm)	1.57" (40.0 mm)

RENO LIGHTING
All Rights Reserved © Renolighting (905) 604-4666 | sales@renolighting.com | www.renolighting.com
Reno Lighting reserves the right to change this product and related instructions without notice.
Refer to the product page for the latest information.